VS TAL® Larder 500

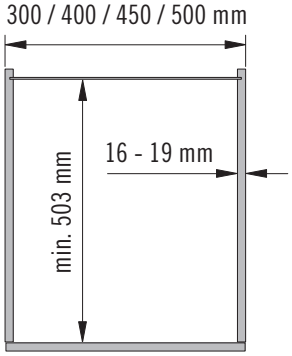

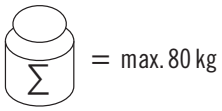

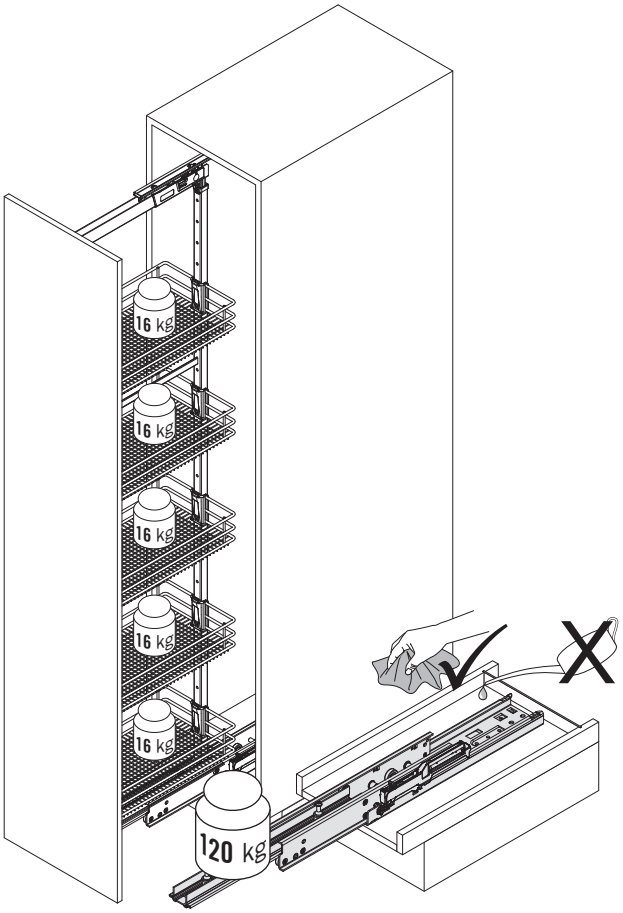

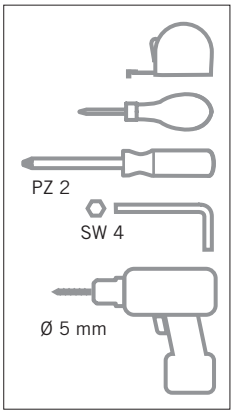



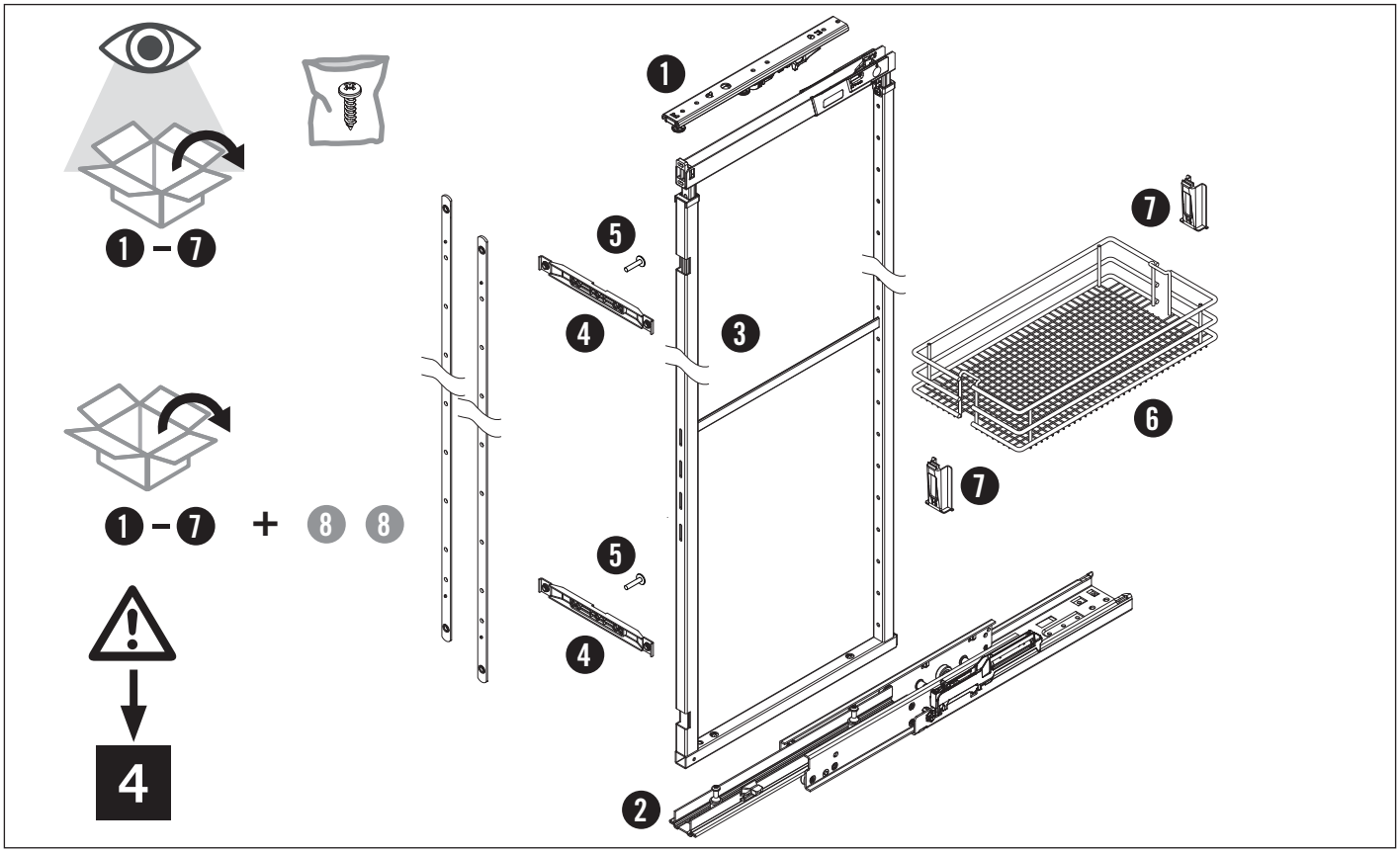

09 / 2024

44011747_02

!

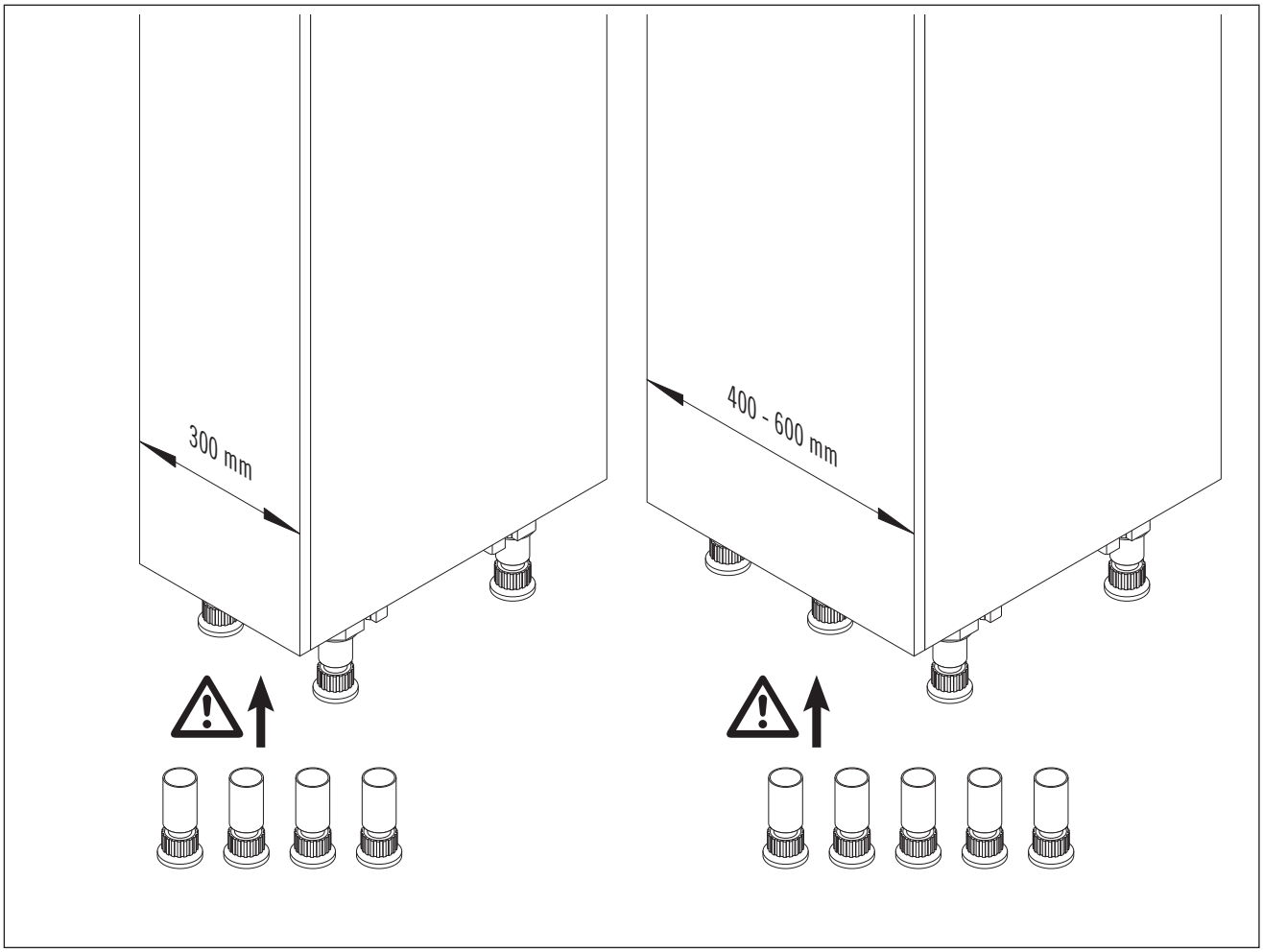
300 mm
400 - 600 mm

!

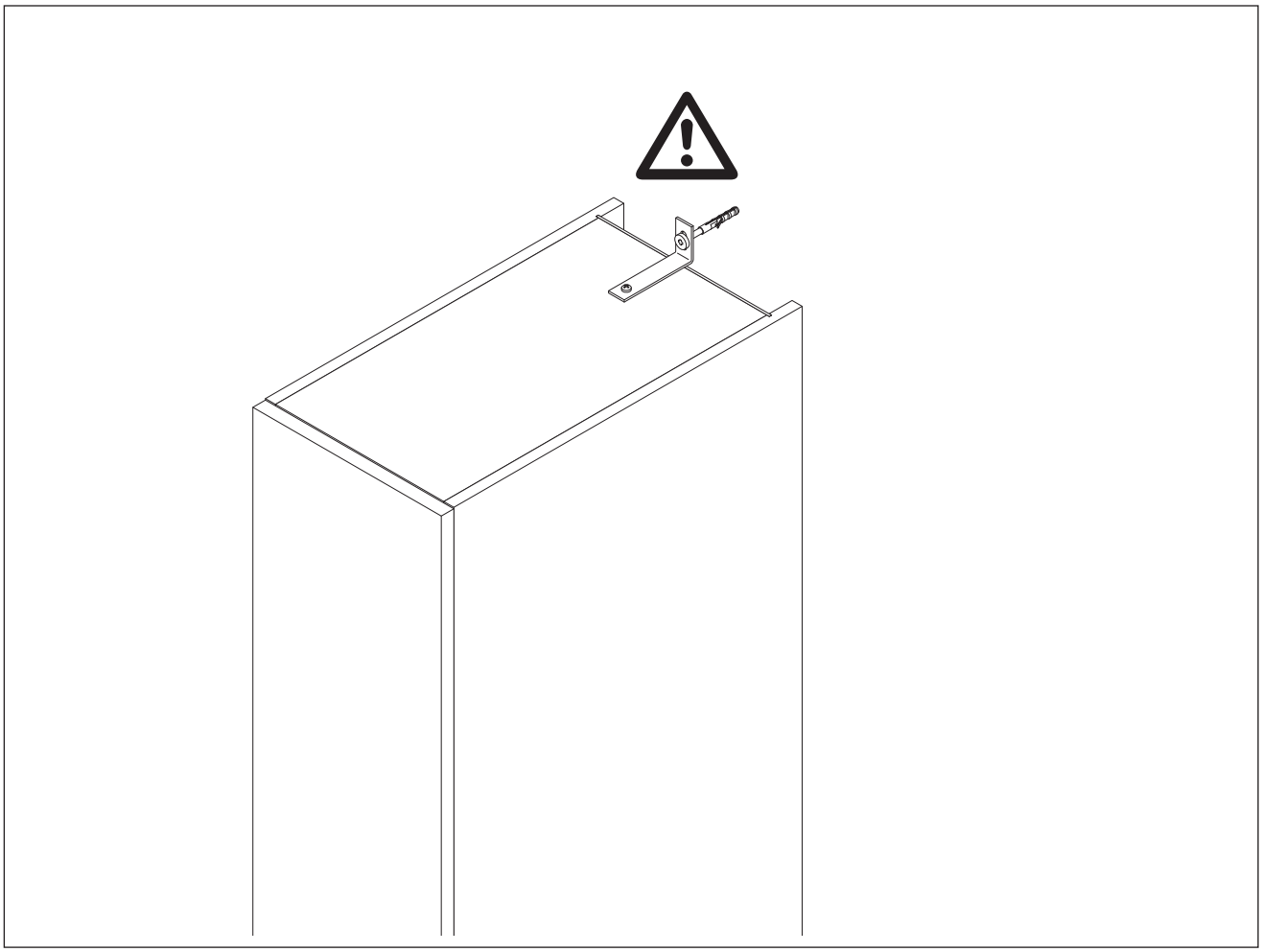

1





A

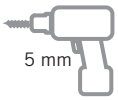



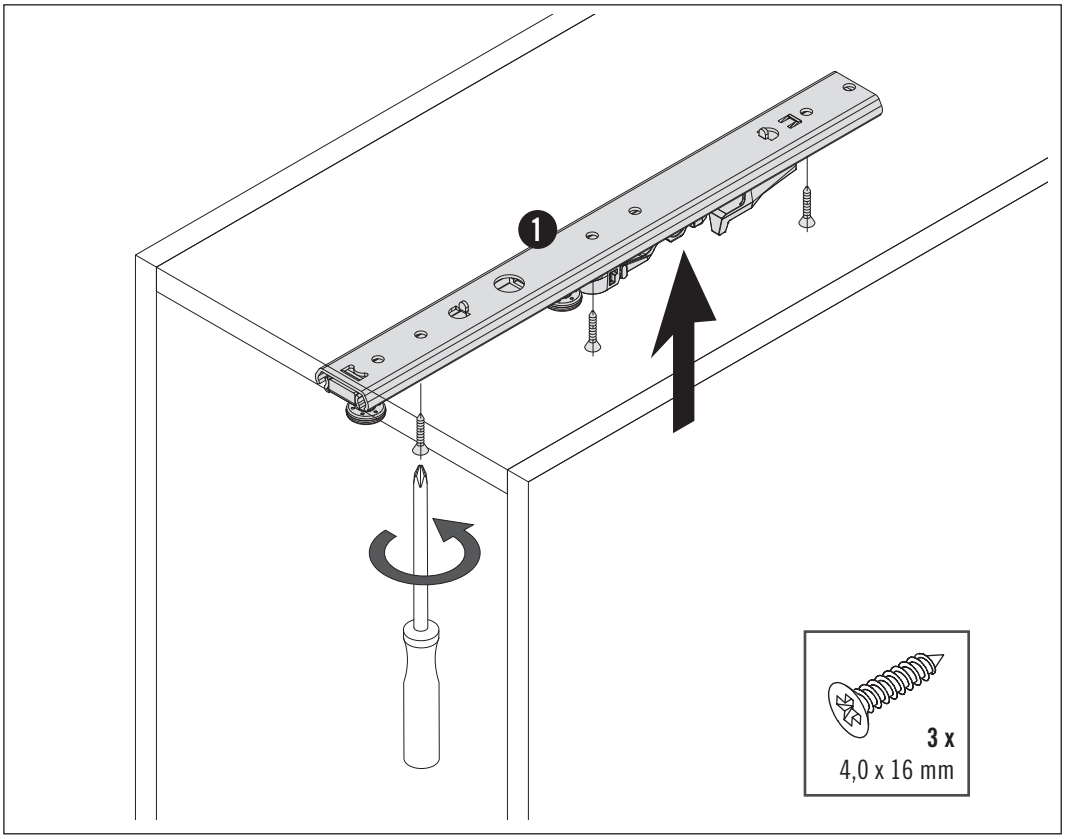

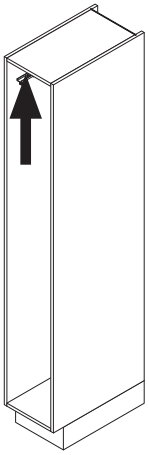

2





B



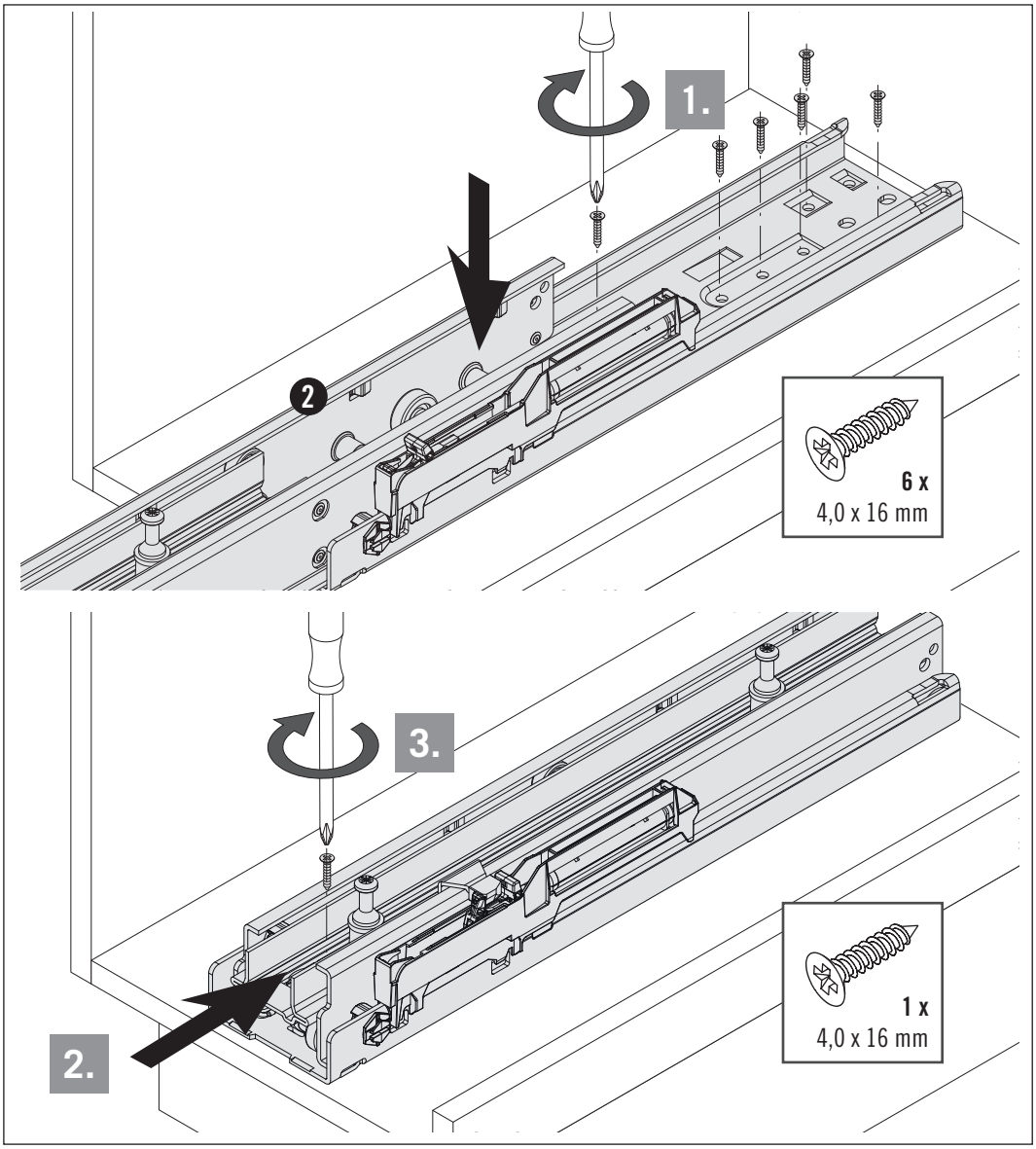

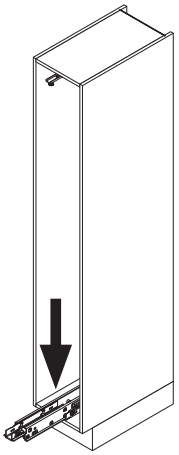

3

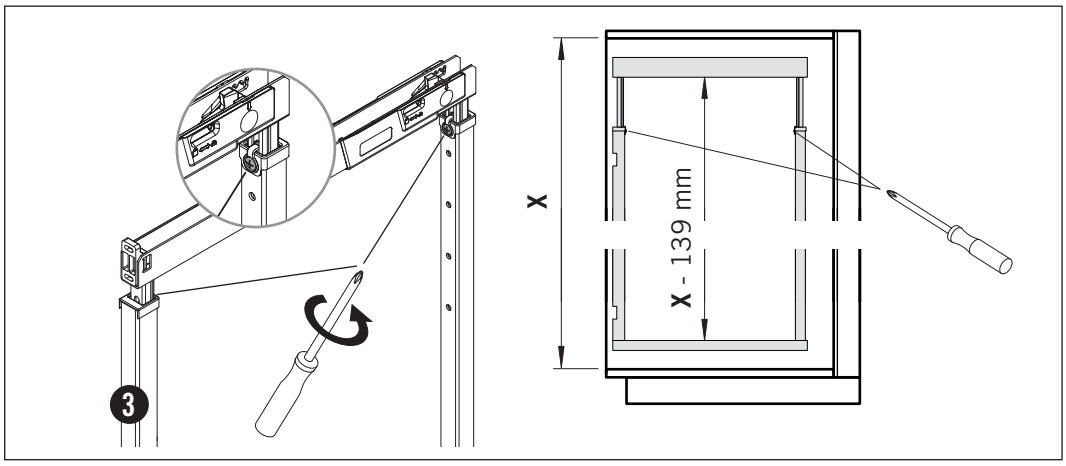

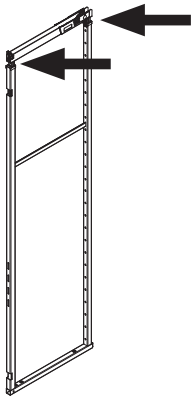

4



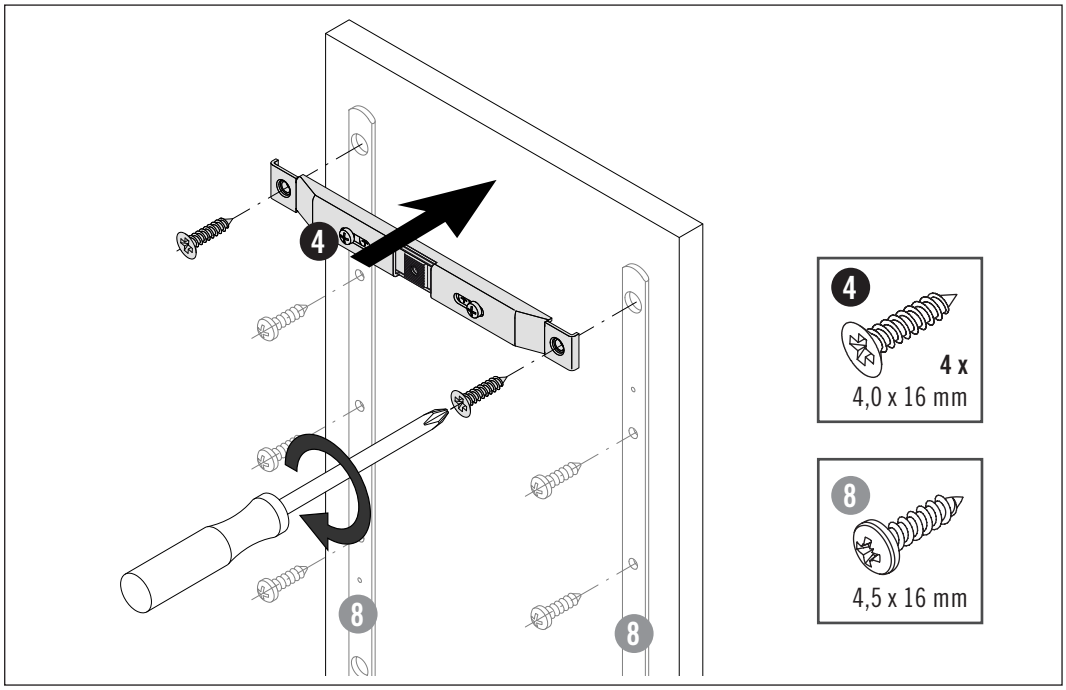

4 x
4,0 x 16 mm

8
4,5 x 16 mm

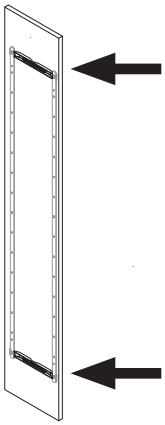

5

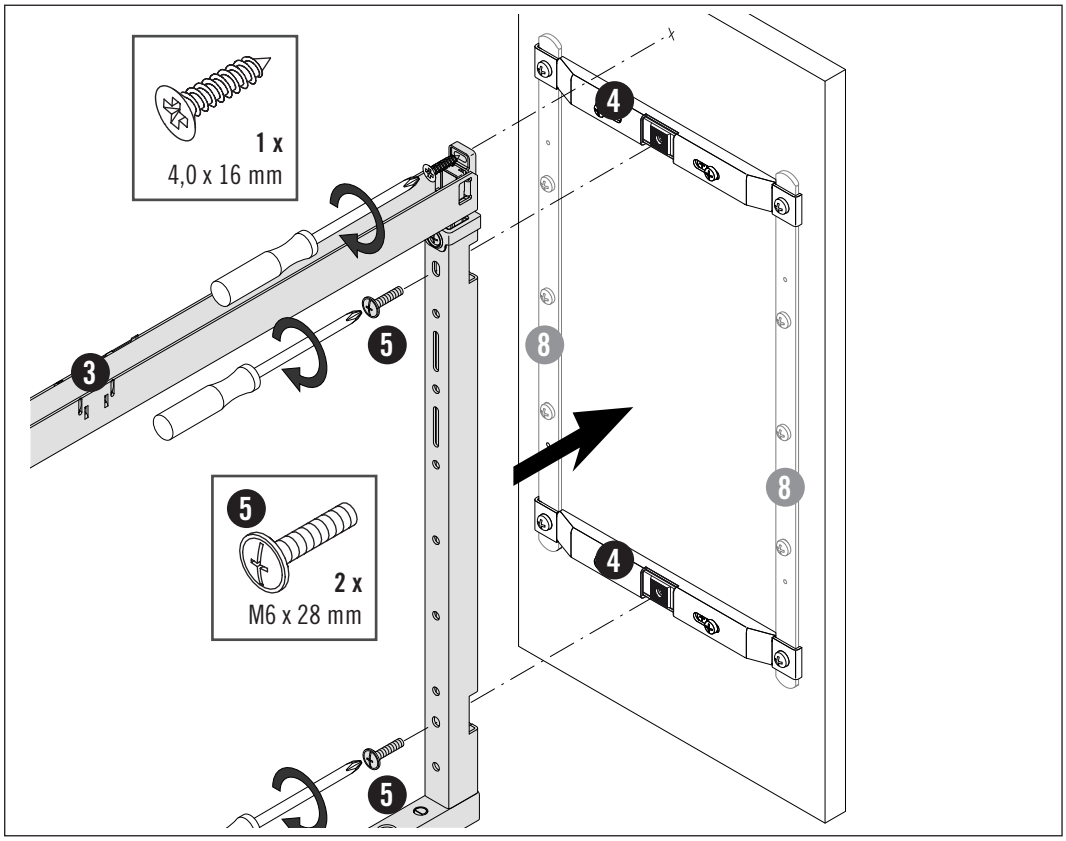

1 x
4,0 x 16 mm

5
2 x
M6 x 28 mm

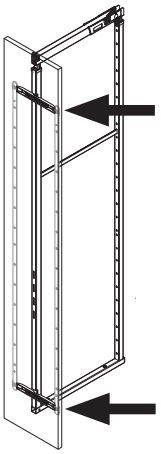

6

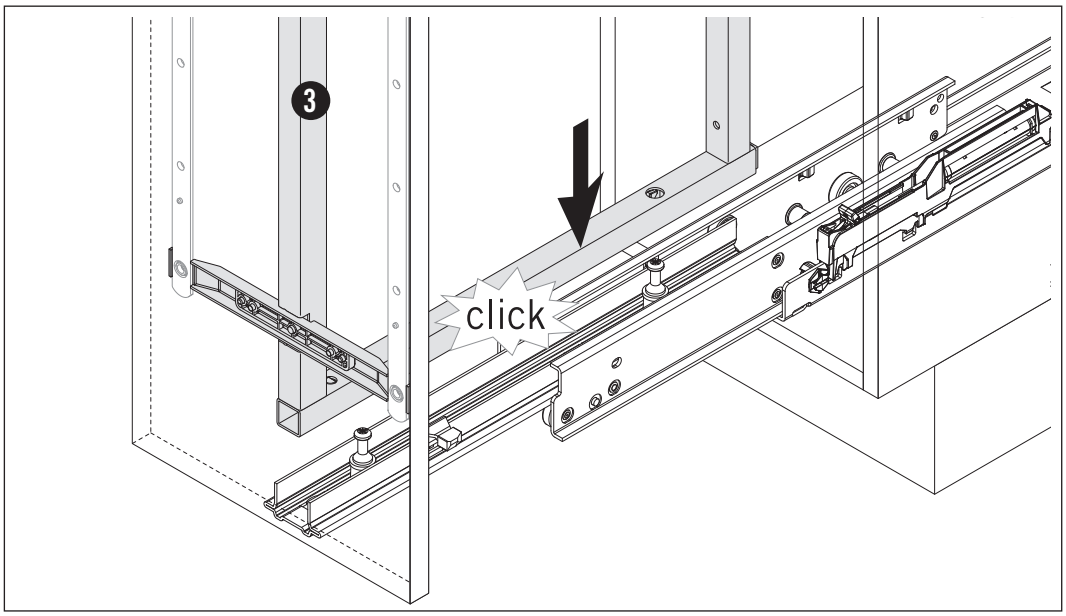

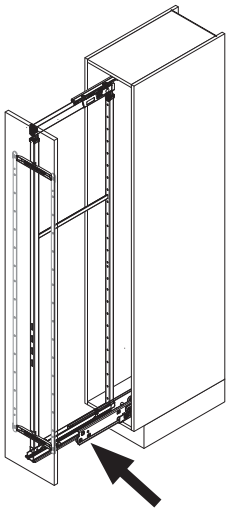

7

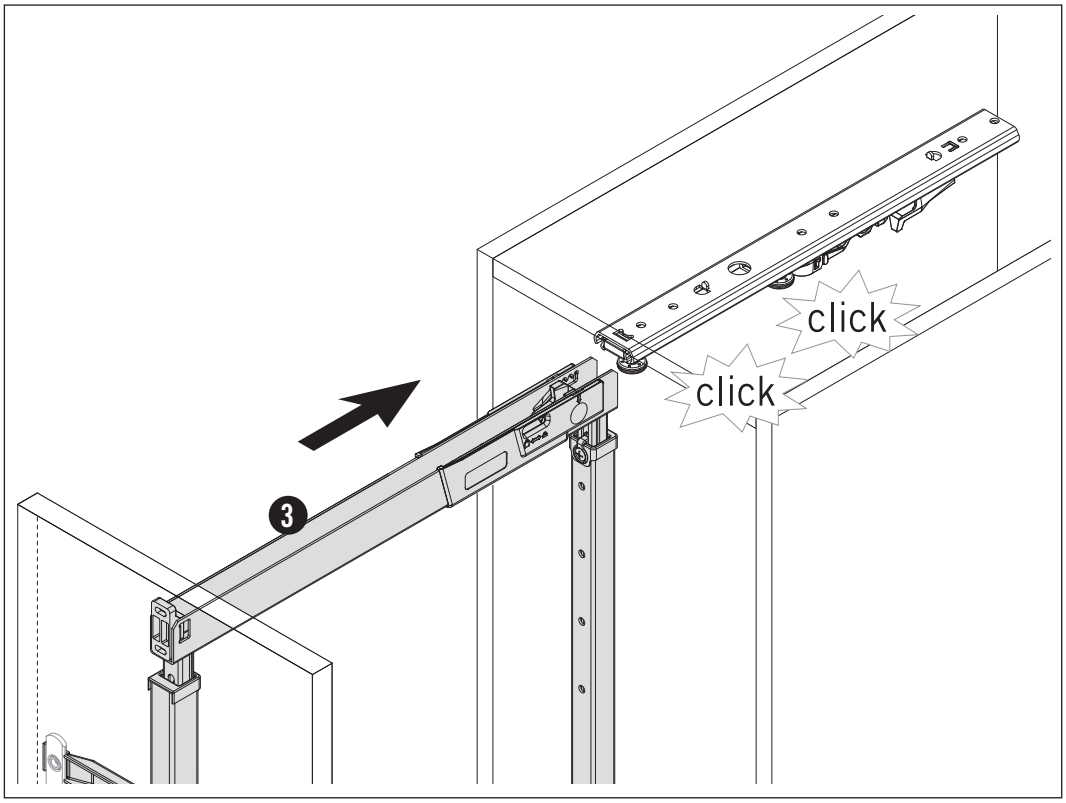

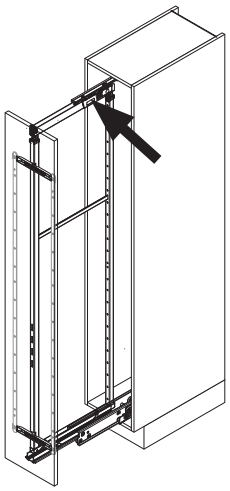

8



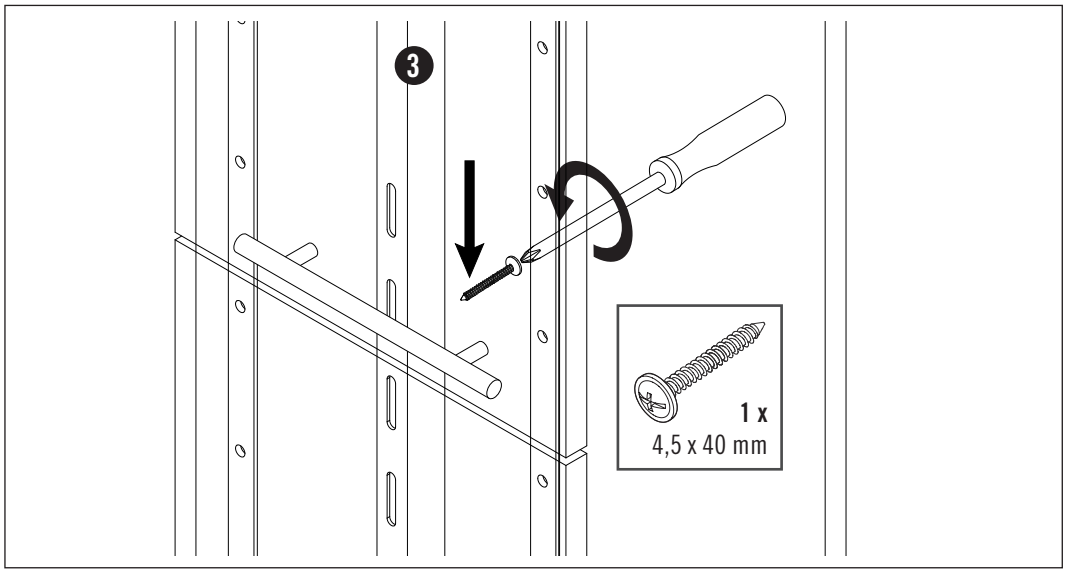

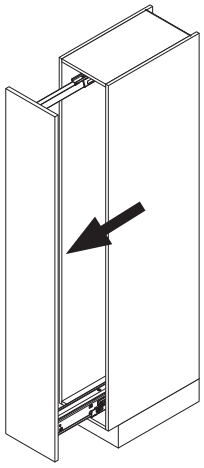

8

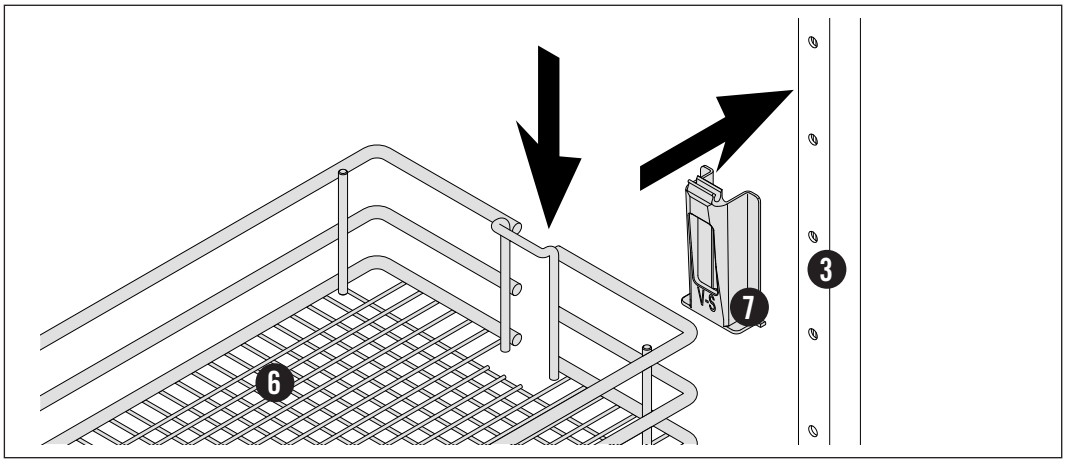

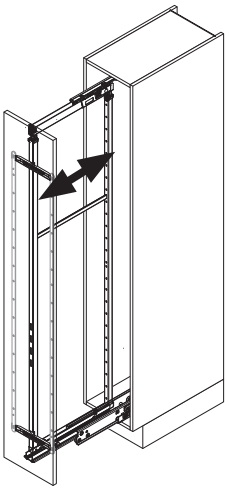

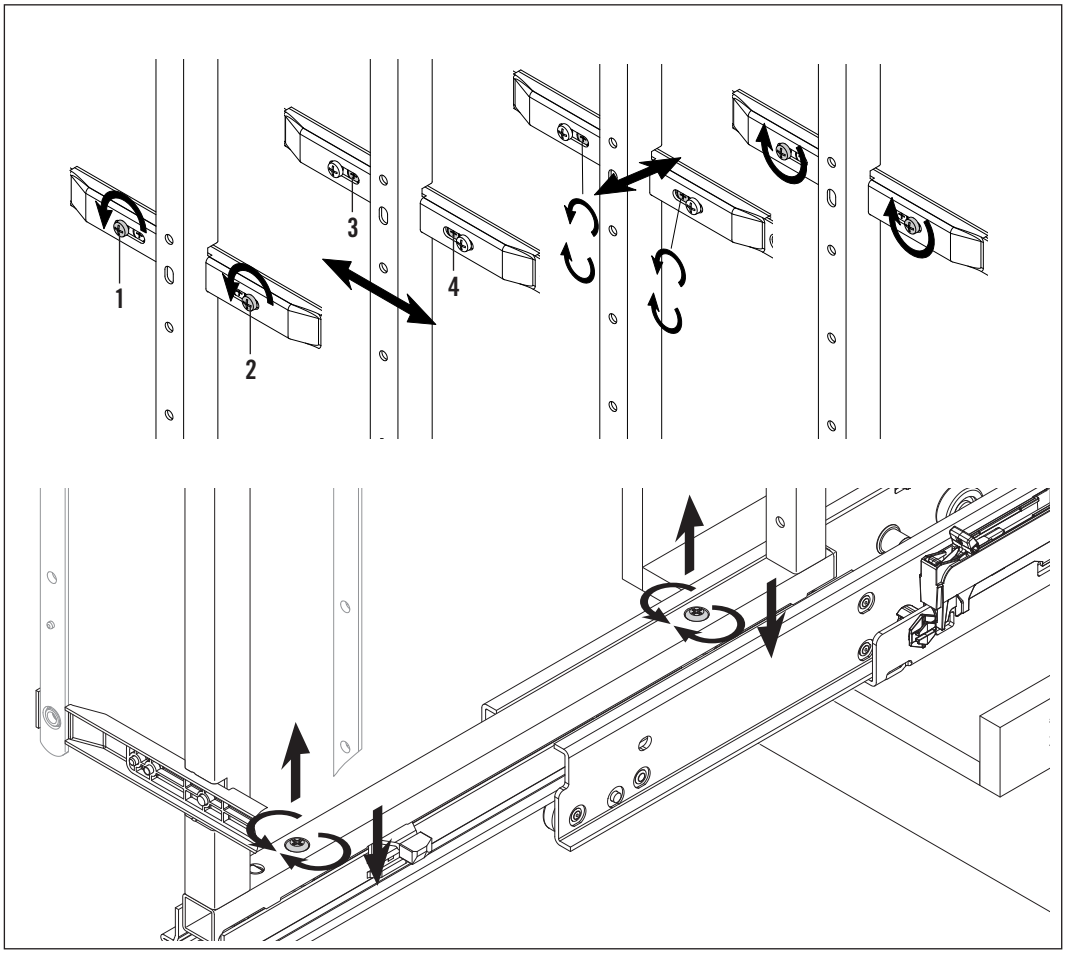

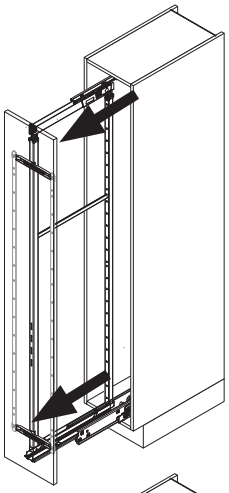

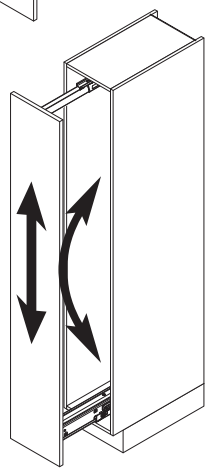

!



SW 4

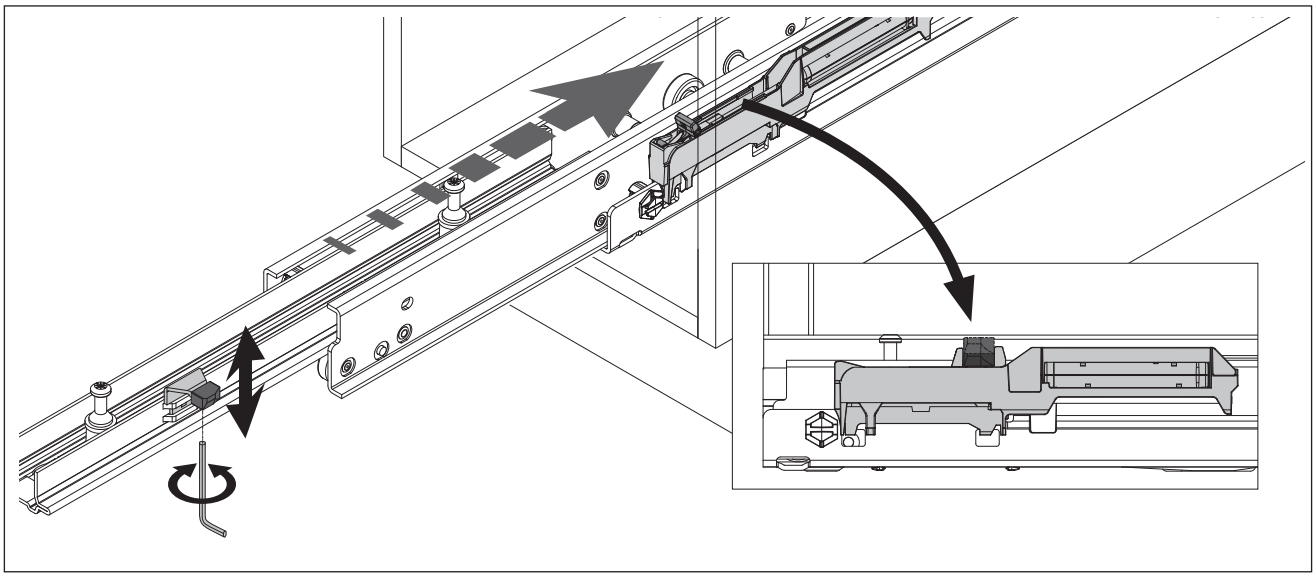

A


5 mm

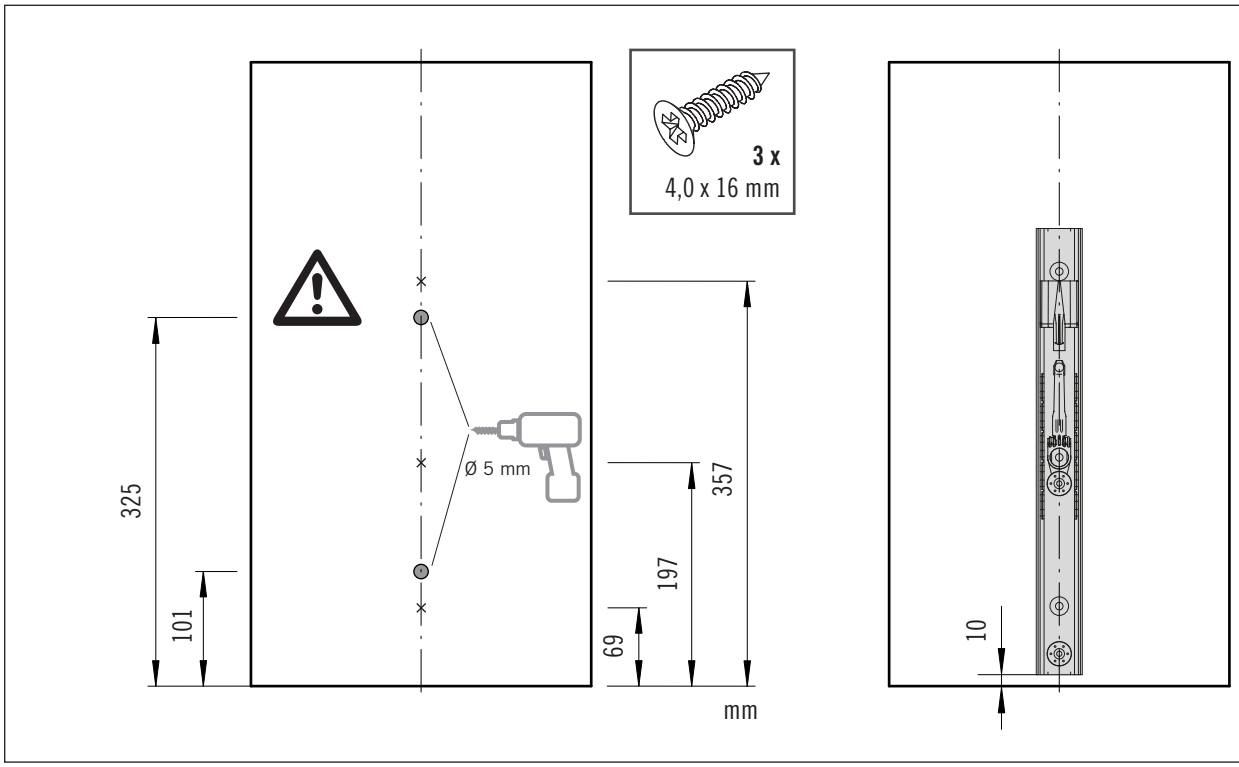
3 x
4,0 x 16 mm
325
101
Ø 5 mm
69
197
357
mm
10

B

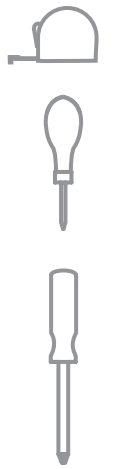

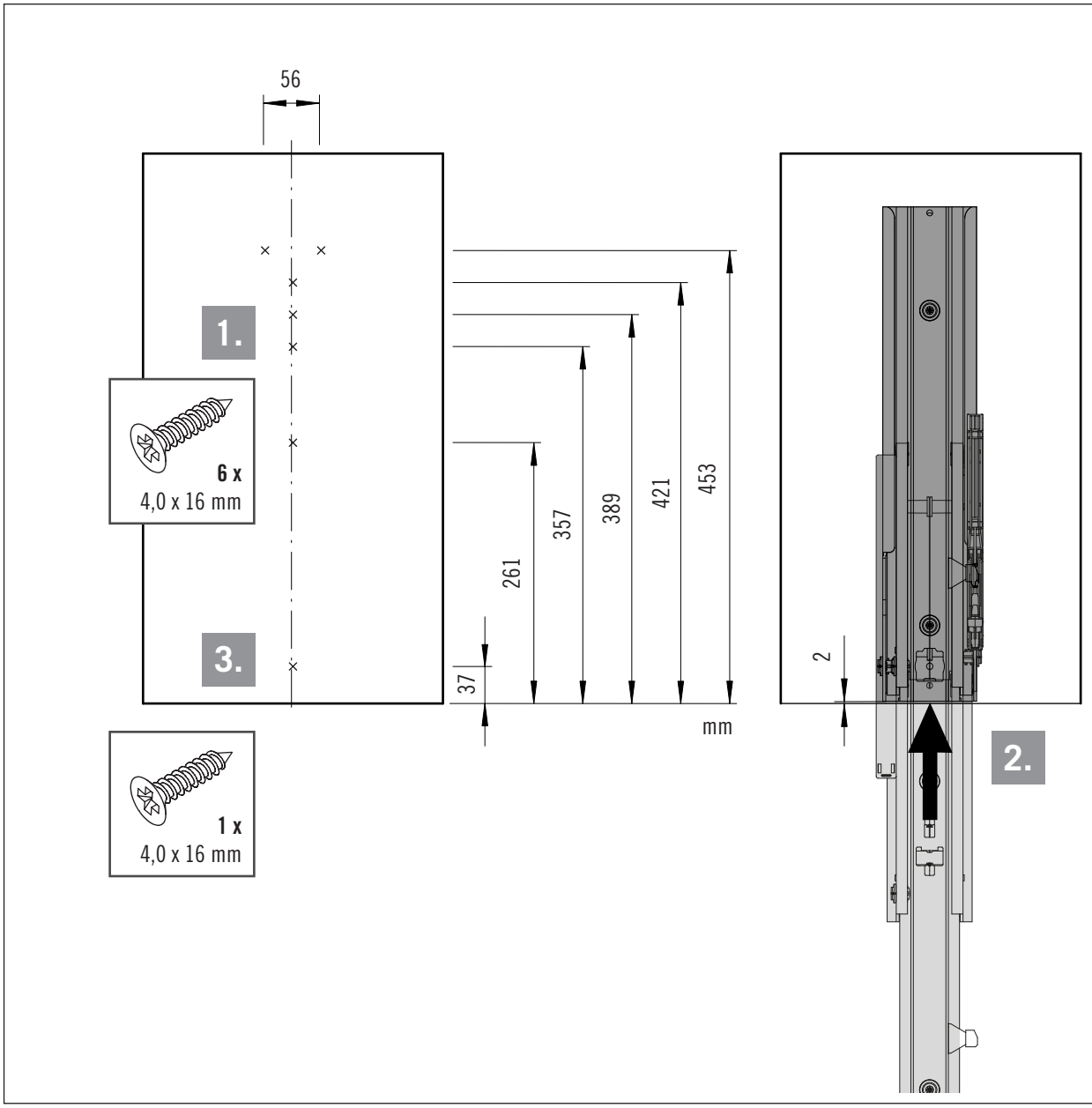
56
1.
6 x
4,0 x 16 mm
3.
1 x
4,0 x 16 mm
37
261
357
389
421
453
mm
2
2.

C



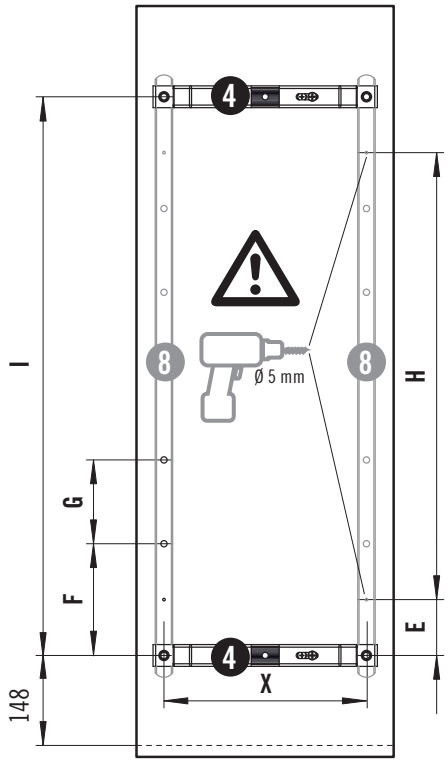

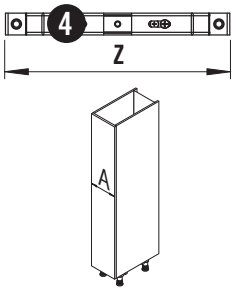

A	X	Z
300	232	257
400	325	350
450	375	400
500	425	450

mm

VS TAL® Larder	E	F	G	H	I
1	64	96	2 x 96	256	384
2	64	128	4 x 96	512	640
3	64	112	7 x 96	768	896
4	64	96	10 x 96	1024	1152
5	64	128	12 x 96	1280	1408
6	64	96	14 x 96	1408	1536
7	64	96	16 x 96	1600	1728

mm

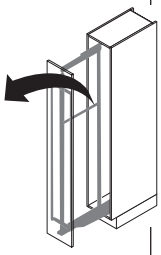

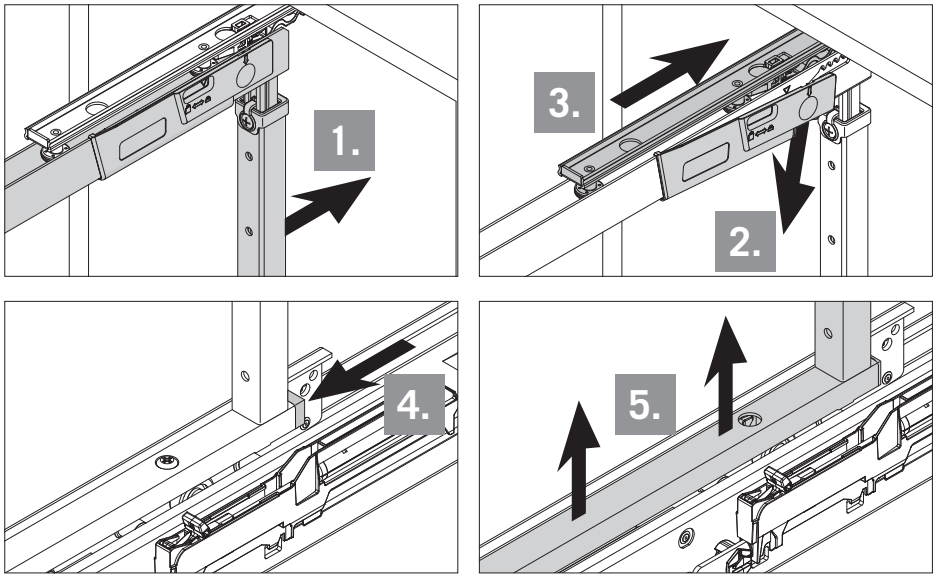

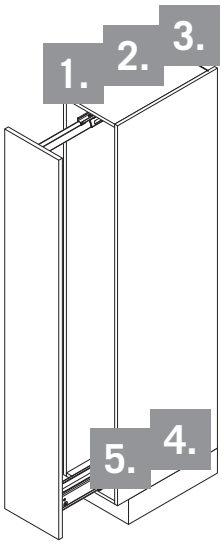

kg

